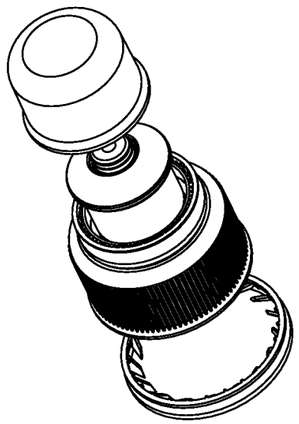

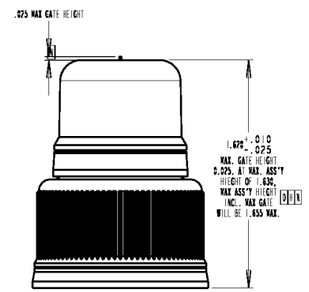

TIP CLOSED POSITION

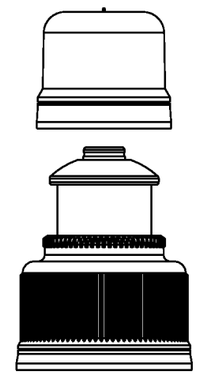

TIP OPEN POSITION

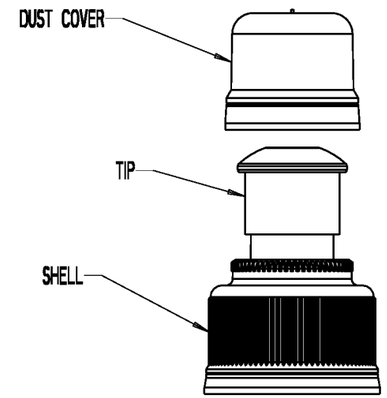

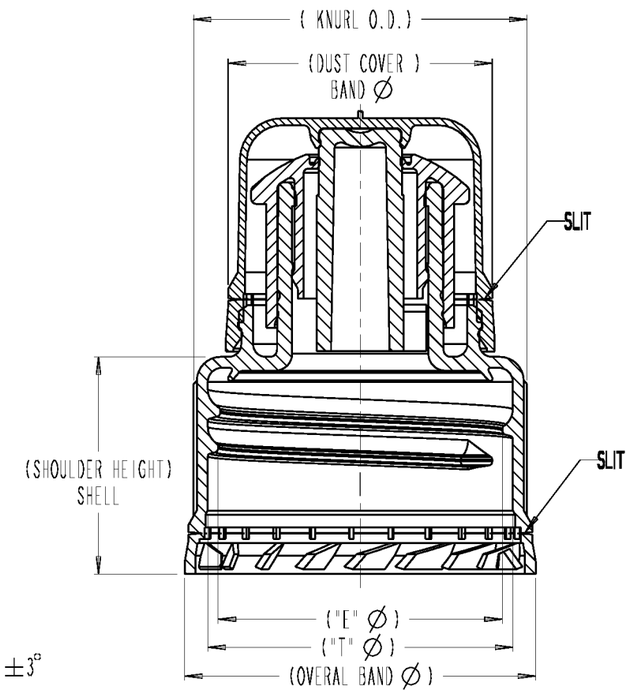

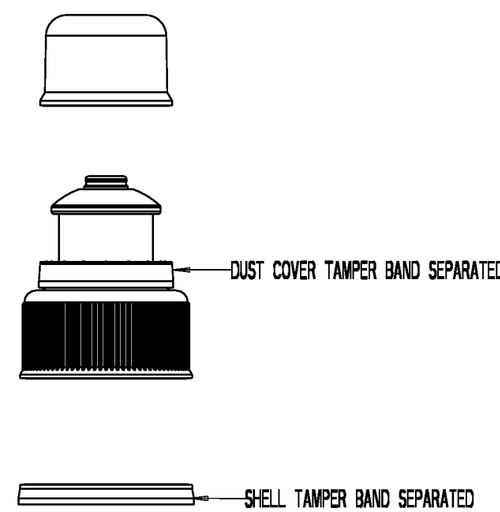

SCORED ASSEMBLY WITH TAMPER BANDS SEPARATED

1. THREAD INFORMATION:
   SINGLE LEAD THREAD
   8 THREADS PER INCH
   HELIX ANGLE 2° 12'
   FULL DEPTH THREAD TO BE GENERATED 495° ±3°

ID	IMPERIAL	METRIC
KNURL OD	1.186 ±0.010	30.12 ±0.25
OVERALL HEIGHT	1.620 +0.010/-0.025	41.15 +0.25/-0.64
E	1.010 ±0.008	25.65 ±0.20
T	1.084 ±0.010	27.53 ±0.25
OVERALL BAND Ø	1.247 ±0.010	31.67 ±0.25
DUST COVER BAND Ø	0.955 ±0.015	24.26 ±0.38
SHOULDER HEIGHT SHELL	0.772 ±0.010	19.61 ±0.25

METRIC DIMENSIONS & TOLERANCES ARE CALCULATED

REV.	DATE	DRAWN	DESCRIPTION
P	4/06/04	FJS	Removed & Added Part Numbers
N	4/22/03	WLE	Was 1.616, Added 0.025 Max Gate Height
M	6/26/02	FJS	Added Part, Mold, & Quality Plan Numbers Removed Part No. 23135S4 Shell Silver
L	4/11/02	FJS	Changed Tip Pull Force 9.5 to 12
K	7/30/01	FJS	Added Part & Mold Numbers
J	3/26/01	FJS	Added New Part Numbers & Liner Material (See Note 8)
I	1/10/00	DPW	Changed Part Numbers & Added Clear Color
H	9/23/99	BEN	1.620 was 1.610
G	5/20/99	BEN	Added new part #'s and mold #'s.
F	12/11/98	BBB	Removed customer & assembly part numbers and added reference note.
E	9/15/98	SSG	Modified part #'s, customer #'s, assembly #'s Performance characteristics
D	8/4/98	SSG	Modified part #'s, mol #'s, customer #'s, assembly #'s. Performance characteristics. 1.610 was 1.618
C	4/13/98	SSG	12.5 was 10.0 in note 4.
B	1/16/97	SSG	Updated specs. Removed specs. we don't perform anymore.
A	10/27/97	SSG	Fully updated dwg. and specs.

THIS DRAWING BASED ON ERIE DRAWING 4099-01-P.DRW AND MODEL 28MMASSY.ASM

GENERAL TOLERANCES
X.XXXX = ±X.XXXX
X.XXX = ±X.XXX
X.XX = ±X.XX
X.X = ±X.X
X = ±X
ALL ANGLES ±X.XX°
BREAK ALL SHARP EDGES X.XXX
ALL SURFACES FINISHED TO
NOTE: ALWAYS ALL MEAN DIMENSIONS AND TAPERS FROM ALL SHELLED AND TAPERED HOLES.

ALCOA CLOSURE SYSTEMS INTERNATIONAL, INC.
CRAWFORDSVILLE, IN 47933

CLOSURE, 28MM SPORTS-LOK

REV	LOCATION	DESCRIPTION	DATE	DESIGNER
E		CHANGE TO ERIE MODELS	04/06	JB
A		RELEASED FOR MANUFACTURING	08/00	JB

THIS DRAWING AND ALL INFORMATION CONTAINED HEREIN ARE CONFIDENTIAL AND THE PROPERTY OF ALCOA CLOSURE SYSTEMS INTERNATIONAL, INC. AND SHALL NOT BE COPIED OR REPRODUCED OR USED IN WHOLE OR PART IN ANY MANNER WHATSOEVER EXCEPT WITH THE PRIOR WRITTEN AUTHORIZATION OF ALCOA CLOSURE SYSTEMS INTERNATIONAL, INC. 1205 ELMORE STREET, CRAWFORDSVILLE, INDIANA 47933 USA.

MATERIAL
FINISHED HARDWARE
DESIGNER: ERIE
SCALE: 2.000
DATE: 04/10/06
SIZE: D
SHEET NUMBER: 1 OF 1
PART NUMBER: 222032
CURRENT REV: E