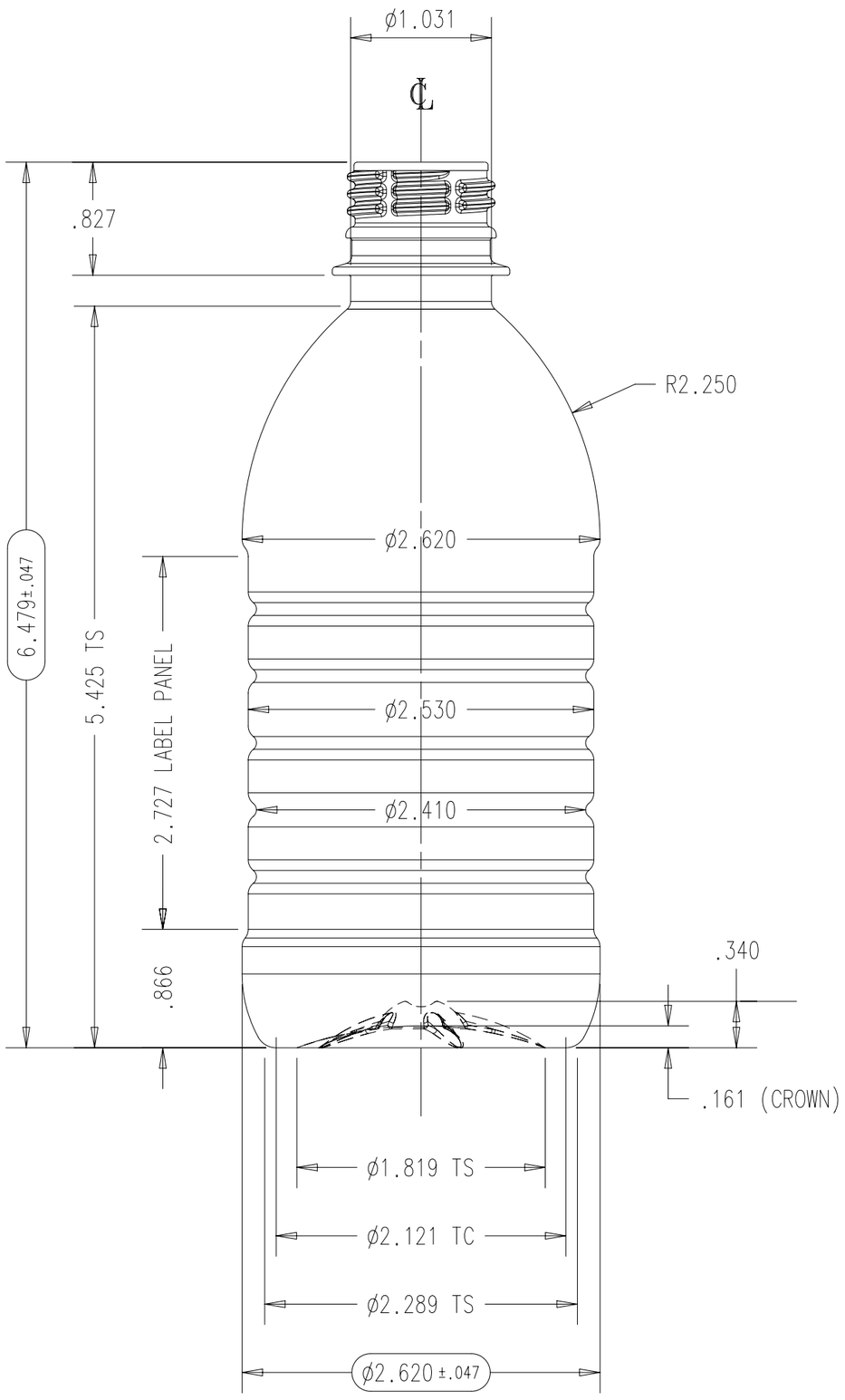

FRONT VIEW

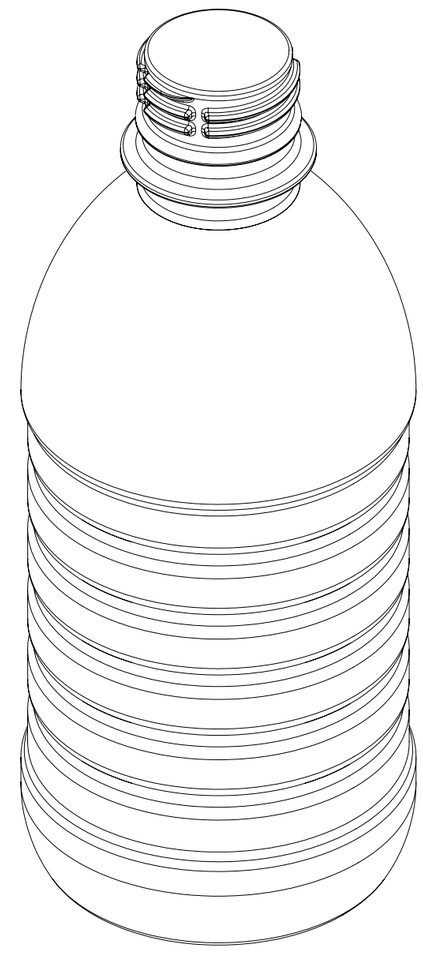

ISO VIEWS

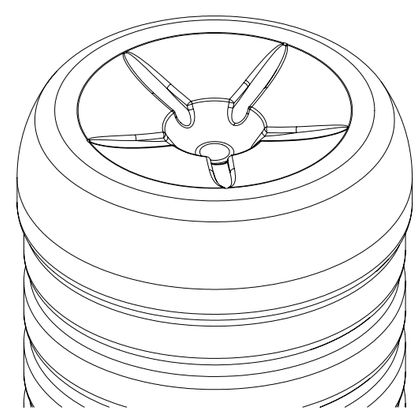

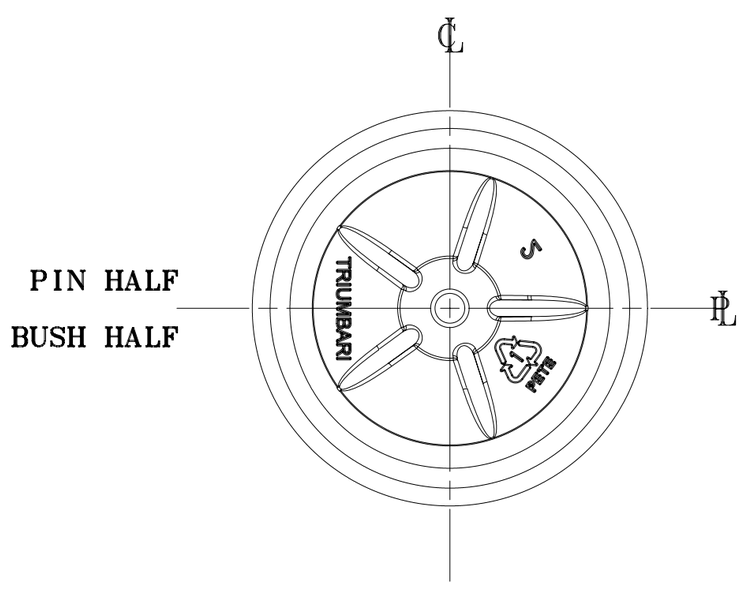

BOTTOM VIEW

THIRD ANGLE PROJECTION

DIMENSIONS

TC = TO CENTER
TP = TANGENT POINT
TS = TO SHARP (IP)
TOB = TOP OF BOTTLE

CONFIDENTIAL

THIS DRAWING AND THE INFORMATION HEREIN ARE CONFIDENTIAL AND NOT TO BE DISCLOSED WITHOUT THE EXPRESS CONSENT OF MOLD-SPEC INC.

TOLERANCES

.X = ±0.010
.XX = ±0.005
.XXX = ±.001
ANGLES = ±30°

ALL DIMENSION ARE AT MMC UNLESS OTHERWISE SPECIFIED

MAT'L: PETE		FINISH: 28mm - PCO	
DT'L BY: S.T.L.	MOLD-SPEC INC.		
DATE: 12-OCT-05	429 Dewitt Road, Unit 8 Stoney Creek, Ontario, L8E 4C3 E-Mail: engineering@moldspec.com Web Site: http://www.moldspec.com	Tel: (905) 664-2776 Fax: (905) 664-8163 1-800-251-4596	
MD'L BY S.T.L.			
DATE: 12-OCT-05			
CUSTOMER TRIUMBARI CONTAINERS		PROD. No.	-
PRODUCT 355ml RIBBED WATER		MACHINE	SIPA/ADS
TITLE: PRODUCT DRAWING			
SCALE FULL & NOTED	JOB No. MS-1482C	DWG No. C-1482C-01	REV. -
SHEET 1 OF 1			